# Jet Diffuser
## JD



**Specifications**

- Item code: JD
- The nozzle and the decorative ring are manufactured in aluminium
- The connection part is made of aluminum
- Hidden fixing
- Available sizes in mm: 100, 125, 160, 200, 250, 315

### Description

The Jet Diffuser is ideal for large, high spaces such as theaters, cinemas, industrial halls and shopping malls. This diffuser offers low sound pressure and high airflow capacity, providing a wide range of air distribution. Suitable for both horizontal and vertical air supply. The spherical nozzle can be adjusted every 30° in different directions without affecting air resistance or noise level.

Other RAL colours for the Jet Diffuser are also available on request.

### Dimensions

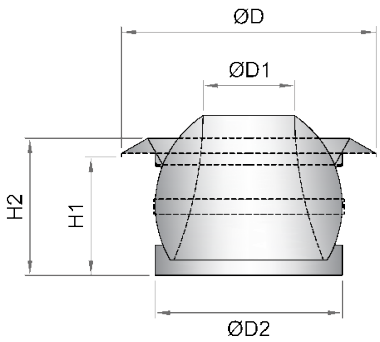


### Dimensions

| Model | ØD (mm) | ØD1 (mm) | ØD2 (mm) | H1 (mm) | H2 (mm) |
|---|---|---|---|---|---|
| JD100 | 139 | 45 | 98 | 57 | 72 |
| JD125 | 170 | 60 | 123 | 73 | 90 |
| JD160 | 210 | 80 | 158 | 90 | 110 |
| JD200 | 264 | 105 | 198 | 108 | 132 |
| JD250 | 315 | 128 | 247 | 137 | 183 |
| JD315 | 388 | 163 | 313 | 170 | 200 |



ClimaConnect | Parkforum 1047 | 5657 HJ Eindhoven

## Properties

JD100

| m³/h | dB(A) | Meter | PA |
|---|---|---|---|
| 71 | <20 | 10 | 84 |
| 147 | 34 | 20 | 17 |
| 165 | N/A | N/A | N/A |

JD125

| m³/h | dB(A) | Meter | PA |
|---|---|---|---|
| 122 | 25 | 10 | 71 |
| 245 | 26 | 20 | 46 |
| 174 | N/A | N/A | N/A |

JD160

| m³/h | dB(A) | Meter | PA |
|---|---|---|---|
| 165 | <20 | 10 | 26 |
| 330 | 44 | 20 | 113 |
| 497 | 55 | 5 | 200 |

JD200

| m³/h | dB(A) | Meter | PA |
|---|---|---|---|
| 220 | <20 | 10 | 29 |
| 435 | 38 | 20 | 123 |
| 655 | 50 | 30 | 218 |

JD250

| m³/h | dB(A) | Meter | PA |
|---|---|---|---|
| 274 | <20 | 10 | 83 |
| 548 | 34 | 20 | 63 |
| 825 | 45 | 30 | 112 |

JD315

| m³/h | dB(A) | Meter | PA |
|---|---|---|---|
| 350 | <20 | 10 | 11 |
| 682 | 28 | 20 | 55 |
| 1055 | 40 | 30 | 104 |



ClimaConnect | Parkforum 1047 | 5657 HJ Eindhoven